RUBBER MOUNTS AND BUSHINGS IN FULL SCALE

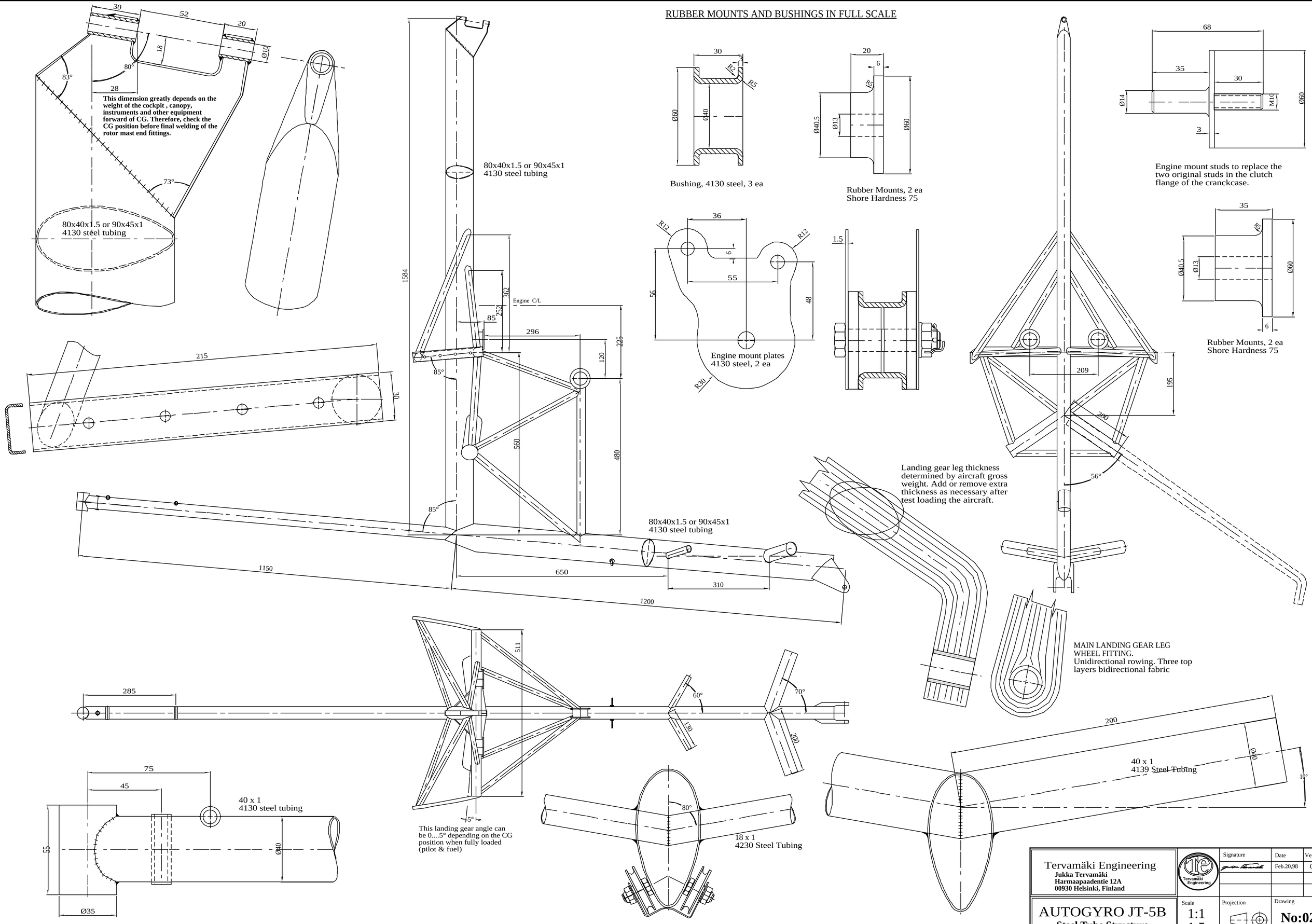

Tervamäki Engineering Jukka Tervamäki Harmaapaadentie 12A 00930 Helsinki, Finland		Signature	Date	Version
			Feb.20,98	02
AUTOGYRO JT-5B **Steel Tube Structure**	Scale 1:1 1:5	Projection	Drawing **No:02**	